PERMAFROST AND PERIGLACIAL PROCESSES
Permafrost Periglac. Process. **10**: 113–124 (1999)

Miniature Temperature Dataloggers for Mapping and Monitoring of Permafrost in High Mountain Areas: First Experience from the Swiss Alps

Martin Hoelzle,[1,2] Matthias Wegmann[1] and Bernhard Krummenacher[3]†*

[1]Laboratory of Hydraulics, Hydrology and Glaciology, ETH-Zurich, Switzerland
[2]Geographical Institute, University of Zurich, Switzerland
[3]Geographical Institute, University of Bern, Switzerland

ABSTRACT

Measurements of bottom temperatures of the winter snow cover (BTS) constitute a well-established method to map permafrost distribution in mountain areas. A method for continuous measurements of BTS with miniature dataloggers (MTDs) is used with a newly developed logger. This new tool is specially designed for rough field conditions. It was tested in two case studies on and around rock glaciers in Switzerland. One test site was in the Murtèl-Corvatsch area (Upper Engadin) and the other in the Furggentälti area (Bernese Alps). The basic assumptions of the conventional BTS method were verified with continuous measurements. Important boundary conditions for BTS measurements are a sufficiently thick, undisturbed snow cover and an adequate measurement time. In autumn, before the snow cover is well developed, air circulation is still possible within the coarse active layer of rock glaciers, and heat exchange through the thin snow cover is facilitated. At the end of winter, meltwater percolation disturbs the equilibrium BTS. At the base of an artificially compacted snow cover, temperatures were influenced by atmospheric variations throughout the whole winter. Use of the new loggers is suggested as suitable for mapping and monitoring the distribution and long-term development of mountain permafrost. Process understanding in the active layer of coarse debris material, on the other hand, needs further investigation. Copyright © 1999 John Wiley & Sons, Ltd.

RÉSUMÉ

La mesure des températures sous la couverture de neige en hiver (BTS) constitue une méthode bien établie pour cartographier la distribution du pergélisol dans les régions de montagne. Des mesures continues de BTS avec des enregistreurs de données miniaturisés (MTD) ont été réalisées avec une nouvelle boite d'enregistrement. Ce nouvel instrument a été spécialement construit pour travailler dans des conditions de terrain sévères. Il a été testé en deux endroits sur et autour des glaciers rocheux de Suisse. Un site testé était dans la région de Murtèl-Corvatsch (Engadine supérieure) et l'autre dans la région de Furggentälti (Alpes bernoises). Les affirmations de base de la méthode conventionnelle du BTS ont été vérifiées par des mesures continues. Des conditions importantes pour la réalisation de mesures BTS sont l'existence d'une couverture de neige non remaniée suffisamment épaisse et le choix d'un moment adéquat pour la mesure. En automne alors que la couverture de neige n'est pas encore bien développée, une circulation de l'air est encore possible dans la couche active grossière des glaciers rocheux et les échanges de chaleur au travers de la fine couche de neige est facilitée. A la fin de l'hiver, la percolation d'eaux de fonte

* Correspondence to: Martin Hoelzle, VAW, Section of Glaciology, Gloriastrasse 37–39, ETH-Zentrum, CH-8092, Zurich, Switzerland. E-mail: hoelzle@vaw.baum.ethz.ch
† Present address: Swiss Federal Institute for Snow and Avalanche Research, WSL, Switzerland.

CCC 1045–6740/99/020113–12$17.50
Copyright © 1999 John Wiley & Sons, Ltd.
Received 15 April 1998
Accepted 18 March 1999

perturbe l'équilibre BTS. A la base d'une couche de neige artificiellement compactée, les températures ont été influencées pendant tout l'hiver par les variations atmosphériques. L'emploi de ces nouveaux enregistreurs est probablement approprié pour cartographier et suivre la distribution et l'évolution à long terme du pergélisol de montagne. Comprendre les processus actifs dans une couche active formée de matériaux grossiers nécessite cependant des recherches plus poussées.
Copyright © 1999 John Wiley & Sons, Ltd.

KEY WORDS: BTS measurements; dataloggers; permafrost monitoring; Swiss Alps

INTRODUCTION

Permafrost in high mountain areas is widespread and reacts sensitively to changing climatic conditions (Cheng and Dramis, 1992; Haeberli *et al.*, 1993). Mapping and monitoring of such mountain permafrost, however, are difficult because of the logistic problems involved with field investigations in remote areas of rugged topography. Moreover, the occurrence and distribution pattern of frozen ground in mountainous terrain depend on microclimatic conditions which strongly vary at small scales. Besides air temperature and solar radiation (Hoelzle, 1996), winter snow as redistributed by wind and avalanches constitutes an especially critical interface between the atmosphere and the ground (Keller and Gubler, 1993). At the same time, the bottom temperature of the winter snow cover (BTS) is known to be an excellent indicator of the occurrence or absence of permafrost (Haeberli, 1973; Hoelzle *et al.*, 1993) and can thus be used for rapid mapping of permafrost distribution patterns in mountain areas with a sufficiently thick winter snow cover. The related processes, however, are extremely complex and still poorly understood in detail.

The recent development of miniature temperature dataloggers (MTDs) now opens new possibilities of investigating such processes and of determining permafrost occurrences at low cost and even at sites with difficult access. This technology has the potential of enabling a real breakthrough in the understanding of snow/permafrost interactions on steep slopes and in blocky terrain (Bernhard *et al.*, 1998; Harris, 1996; Harris and Pedersen, 1998; Humlum, 1998a; 1998b; Krummenacher *et al.*, 1998; Matsuoka *et al.*, 1998; Matsuoka, 1998), the calibration and verification of numerical models for simulating spatial permafrost distribution, the definition of ground thermal conditions on rock glacier surfaces and the observation and documentation of long-term climate-change effects on snow and permafrost in remote mountain areas. Therefore, a test study was carried out in the Swiss Alps during the winter of 1994–95. The present paper summarizes the results of this test study and makes recommendations with respect to internationally coordinated mapping and modelling projects as developed by the Working Group on Mountain Permafrost within the International Permafrost Association (cf. Haeberli, 1994).

WINTER SNOW AND MOUNTAIN PERMAFROST

A number of studies concern the interactions between permafrost, its active layer and winter snow cover in the Arctic and sub-Arctic lowland permafrost of North America and Asia (e.g. Brown, 1973; Smith and Burn, 1987; Hinzman *et al.*, 1991; Guoqing, 1993; Hinkel *et al.*, 1993; Huijun *et al.*, 1993; Nelson *et al.*, 1993; Zhang and Osterkamp, 1993; Outcalt and Hinkel, 1996; Smith and Riseborough, 1996). Conditions in areas of discontinuous mountain permafrost at lower latitudes, however, deviate considerably from those in circumpolar permafrost zones. High sun angles, steep slopes, a pronounced microtopography, and active layers consisting of coarse blocks with wide-open pore spaces influence the energy fluxes across the surface of mountain permafrost areas in a way not commonly encountered in circumpolar lowlands (cf. Le Drew and Weller, 1978). Such factors introduce striking effects of slope aspect on solar irradiation, strong advective movements from snow avalanches and water or cold air drainage enhancing lateral energy fluxes (Bernhard *et al.*, 1998), high local-scale surface roughness determining near-surface wind fields and the redistribution of snow, and reduced latent heat in coarse-grained active layers. Numerical modelling of the complex processes and interactions involved must be based on detailed measurement about energy balance and active-layer processes in mountain permafrost,

Copyright © 1999 John Wiley & Sons, Ltd.

which are presently being established at several sites. In the meantime, and for other sites, simpler approaches have to be applied. An extremely useful approach is the consideration of the BTS as an integrator of long-term heat exchange, developing through the effective filter function introduced by a thick enough snow cover in winter.

The influence of the snow cover on ground thermal regimes depends on the thickness, density and duration of the snow cover (Brown, 1965; 1973; Smith, 1975). Snow has a low heat transfer capacity. A sufficiently thick snow cover of around 1 m therefore insulates the soil from short-term variations in atmospheric conditions. Furthermore, the thermal conductivity strongly depends on the density of the snow cover (Gold, 1958; 1963; Goodrich, 1982). Snow with higher densities has a smaller damping effect on daily to seasonal surface temperature waves than snow with lower densities. A large accumulation of snow in early autumn inhibits freezing (cooling of the active layer), but a thick snow cover in spring will delay thawing. The relationship between accumulation and ablation periods will determine the net effect of the snow cover on ground thermal regimes. In discontinuous mountain permafrost areas, where mean annual ground temperatures are generally close to 0 °C, snow cover characteristics can be responsible for the local existence or absence of permafrost. In addition, permafrost itself reduces the heat flux at the base of the snow cover as compared with permafrost-free areas because of the smaller amounts of heat stored during summer in the uppermost metres below the surface. This leads to reduced heat flow towards the base of, and smaller temperature gradients within, the winter snow cover.

In the Alps, the snow cover in the months of February, March and early April is usually well developed and melting has not started yet. During this time, the BTS remains nearly constant and can be used to map permafrost: values measured over permafrost are in general below −3 °C, those at permafrost-free sites or sites with deep-seated inactive permafrost are above −2 °C. Values in between are considered to represent the uncertainty range of the method and/or marginally active permafrost with a thick active layer. A thermistor probe was developed which facilitates a fast and efficient mapping of permafrost distribution patterns (Hoelzle *et al.*, 1993). These conventional BTS probes, consisting of a 2 m rod with a thermistor embedded in its tip, are pushed through the snow cover until the tip touches the underlying ground. During recent years these probes have been further improved and have become a commercially available product for rapid permafrost mapping in mountain areas (BTS probes are available from markasub AG, http://www.markasub.ch). The method was tested by Vonder Mühll and Haeberli (1990), Keller and Gubler (1993), Smith (1975) and Ødegård and Sollid (1993), and BTS mapping has been successfully applied over many years in different environments such as the Alps, Scandinavia and the Arctic by, for instance, King (1984), Hoelzle (1992), Ødegård *et al.* (1996) and Krummenacher and Budmiger (1992). The collected data were also used to develop models for simulating the permafrost distribution in Alpine regions (Funk and Hoelzle, 1992; Hoelzle and Haeberli, 1995; Hoelzle, 1996).

Experience with such conventional BTS measurements in recent years shows that meteorological conditions and/or avalanche danger can prevent field measurements during the suitable period. In addition, the evolution of the winter snow cover considerably varies from year to year, sometimes making the interpretation of measured values less certain. The MTD technology greatly helps to overcome such problems and enables more detailed insights to be gained about the complex heat exchange processes at remote high-altitude sites. It should be kept in mind that the use of such instruments underneath the winter snow cover, as related to the principle of the BTS method, is especially important for a number of reasons. In contrast to summer conditions without snow, the pronounced filter function of thick winter snow eliminates short-term surface effects, enabling the measurement of characteristic and stable average values. Such stable average values reflect winter conditions, which are known to have an especially strong influence on ground thermal conditions (Vonder Mühll *et al.*, 1998). At the same time, BTS values are an expression of heat fluxes from several metres depth, and hence represent evidence about multiyear thermal conditions within layers several metres deep.

MINIATURE TEMPERATURE DATALOGGERS

The requirements for MTDs in alpine and polar environments are quite stringent. Strongly changing temperature and humidity conditions as well as mechanical stresses to the logger box in coarse debris of, for example, creeping permafrost have to

Copyright © 1999 John Wiley & Sons, Ltd.

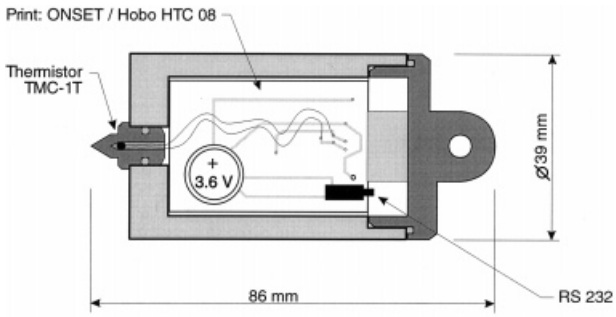

Figure 1. Construction of miniature temperature datalogger (MTD), type UTL1.

be considered with the design of the logger. Different proprietary loggers are available on the market, which are able to record temperature data over periods longer than one year. Many loggers originate from the transport business and do not reach the standards required here. Therefore a new logger box was developed which satisfies these requirements.

The MTD presented is based on a circuit board, a thermistor, a battery and a logger box. The construction is shown in Figure 1. The thermistor is a TMC-1T with a temperature range of −30 to +40 °C and with an accuracy given by the manufacturer of better than 0.25 °C. The energy supply is derived from a 3.6 V lithium battery. The circuit board (ONSET HTC 08) has the capacity to store 7944 measurements. The logger case consists of a viscous plastic called DELRIN, which has a strong mechanical resistance. The cap of the box and the measuring tip are made of aluminium. The aluminium–DELRIN connections are screwed and equipped with O-seals to guarantee waterproofness. The circuit board dimensions are 40 × 28 × 12 mm.

LogBook 2.04 software for DOS, Windows 3.11 or Windows 95 comes as a standard with the circuit board (ONSET HTC 08). This software allows fast and easy programming of the logger. The measurement interval can be set between 1 second and 4.8 hours, thereby providing a maximum measurement duration of 2 years. (The loggers and the software (Y2K tested) are available from the Geographical Institute, University of Bern, Geomorphology Group.)

CASE STUDIES

Two measurement areas were selected for the present study: Murtèl-Corvatsch and Furggentälti. In both areas, the discontinuous permafrost distribution is quite well known; detailed information about local permafrost patterns at both locations was determined by geophysical soundings, geodetic and photogrammetric surveys, conventional BTS soundings and even one borehole available at the rock glacier Murtèl. In both areas, research is concentrated on rock glaciers. These rock glaciers are situated about 200 km from each other; climatic conditions at Murtèl-Corvatsch are more continental than at Furggentälti (Gensler, 1978).

Murtèl-Corvatsch

The Murtèl-Corvatsch area (Upper Engadin, eastern Swiss Alps) is one of the best-investigated mountain permafrost sites of the Alps. The area (Figure 2) is dominated by a well-developed rock glacier. On the north-eastern side is a ski run from the Corvatsch ski resort. The investigated area extends from 2400 to 2600 m ASL. On the rock glacier, several geophysical investigations such as DC resistivity soundings, seismic refraction, georadar and gravimetry soundings were carried out to understand the internal structure (Vonder Mühll, 1993; Vonder Mühll and Klingele, 1994; Vonder Mühll and Huggenberger, 1997). In addition, a 58 m deep borehole through the rock glacier permafrost has been drilled, where detailed data exist from borehole logging and where temperature and deformation are monitored for extended periods (Haeberli *et al.*, 1988; Vonder Mühll and Haeberli, 1990; Vonder Mühll and Holub, 1992; Wagner, 1992). In the same area, BTS mapping (Hoelzle, 1992; 1994) and detailed snow and ground temperature measurements on and near the rock glacier exist (Keller and Gubler, 1993; Keller, 1994). The rock glacier has a surface consisting of coarse blocks with some well-developed ridges and

Copyright © 1999 John Wiley & Sons, Ltd.

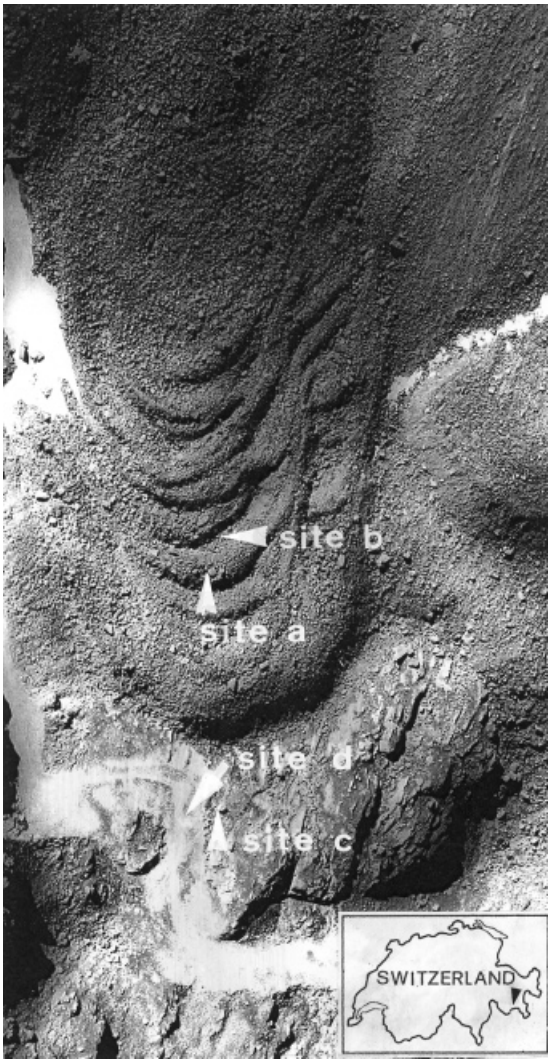

Figure 2. Overview of the rock glacier Murtèl, Upper Engadin, Switzerland. Sites (a), (b), (c) and (d) are where temperature measurements were taken during winter 1994–95.

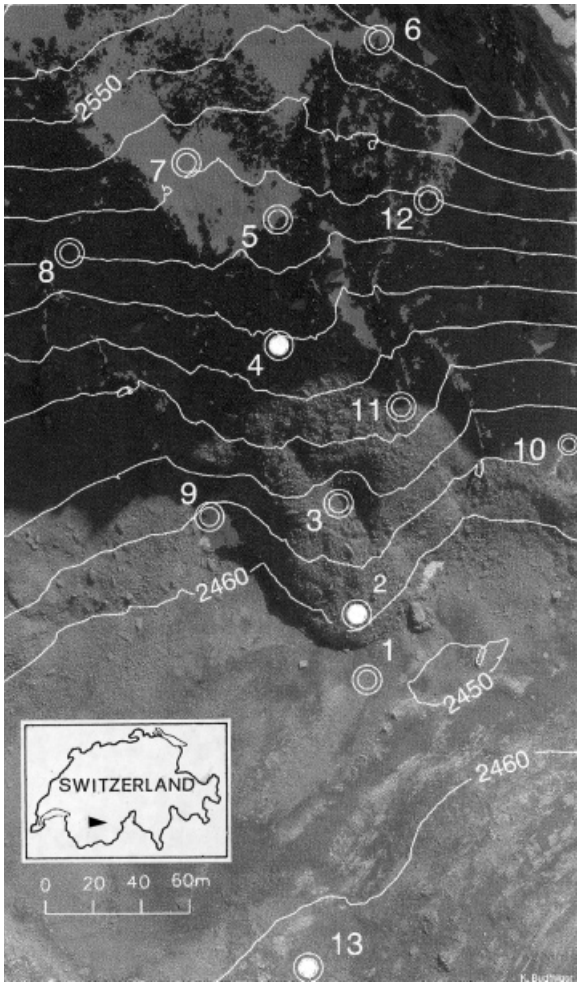

Figure 3. Overview of the rock glacier in the Furggentälti, Bernese Alps, Switzerland. Sites (2), (4), and (13) are selected from those where temperature measurements were taken during winter 1994–95.

furrows. Moisture content in the coarse blocks is not measurable. In front of the rock glacier, alpine meadows exist on a slightly sloping surface.

Furggentälti

Since 1988, the geomorphology group at the University of Bern has undertaken periglacial geomorphology studies and carried out process studies at the Furggentälti (2500–2800 m ASL) in the Bernese Alps (Krummenacher, 1997; Mihajlovic, 1997; Blank, 1997; Krummenacher *et al.*, 1998). The area of the upper Furggentälti (about 1 km^2) has a rich periglacial morphology. Patterned ground, stone rings, solifluction lobes, rock glaciers and other periglacial phenomena are widespread in this Alpine landscape.

The most remarkable form is an active rock glacier of about 350 m length (Figure 3). Research at this site mainly focuses on complex periglacial processes such as the deformation of the rock glacier and frost heave/thaw settlement by photogrammetric investigations and yearly BTS measurements (Krummenacher and Budmiger, 1992; Budmiger, 1997). The rock glacier has a surface with blocks and in the front of the rock glacier are some solifluction lobes.

Copyright © 1999 John Wiley & Sons, Ltd.

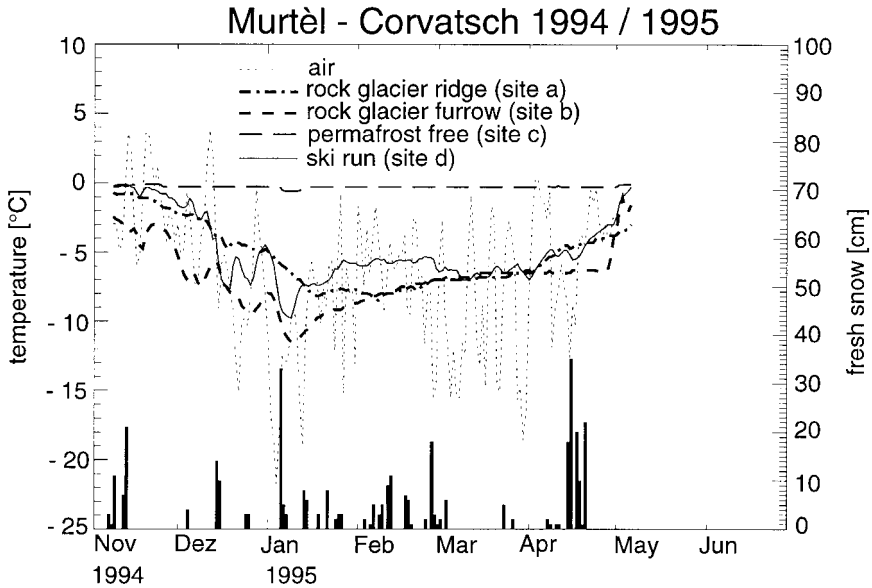

Figure 4. Bottom temperatures of the winter snow cover (BTS) in the Murtèl-Corvatsch area. The histogram shows the fresh snow data of the nearby Murtèl station.

MEASUREMENTS AND RESULTS

During the winter 1994–95, the temperatures on the surface, in front of, and on a ski run close to the active rock glacier Murtèl (Figure 2) were continuously measured. Readings were carried out from 7 November 1994 until 6 May 1995 with an interval of 2.4 hours and were recorded on four MTDs (type UTL1) (Figure 4).

On the rock glacier, two loggers were installed, one on top of a transverse ridge (Figure 2, site a) and one in a furrow (site b). For comparison, one unit was installed in the permafrost-free zone in front of the rock glacier (site c). All these thermistors were situated at the base of an undisturbed snow cover, because they were installed before the first snow had fallen. In addition the effects of an artificially disturbed snow cover on the temperature development was investigated by means of a fourth set of readings taken on a ski run at the base of a compacted snow cover (site d). The two thermistors (c) and (d) were installed approximately 10 m apart from each other. The air temperature was measured at the borehole site on the rock glacier with a conventional datalogger of type CR10 (Campbell Scientific, Inc.). The fresh new snow heights were taken from a standard measurement site (Swiss Federal Institute of Snow and Avalanche Research) at the Corvatsch cable car station. This station is situated at a distance of 400 m from the rock glacier.

In the same winter, 13 MTDs were placed on and around the active rock glacier Furggentälti (Figure 3). All loggers were placed at sites where conventional BTS measurements had been regularly carried out since 1988. Readings were taken from mid-September 1994 until mid-July 1995. The measuring interval for temperature recording was set to 4.8 hours. For this discussion, three typical MTD sites were selected (Figure 5). Site (2) was at the rock glacier front, site (4) was situated in the centre of the rock glacier and site (13) was outside the rock glacier. No snow measurement site exists in the Furggentälti area: the average fresh snow heights of the two closest measuring sites Adelboden (~15 km distance) and Ried-Lötschental (~17 km distance) are therefore used. Since Adelboden (1325 m ASL) and Ried-Lötschental (1480 m ASL) are at a considerably lower altitude than the Furggentälti area (2500–2800 m ASL), only a qualitative interpretation of these snow measurements is possible.

In both regions, Murtèl-Corvatsch and Furggentälti, the loggers (outside the rock glaciers) were placed in such a way that the thermistor was at the interface of the soil surface and the bottom of the snow cover. At places where the fine material is absent (e.g. rock glaciers) and a clear surface does

Copyright © 1999 John Wiley & Sons, Ltd.

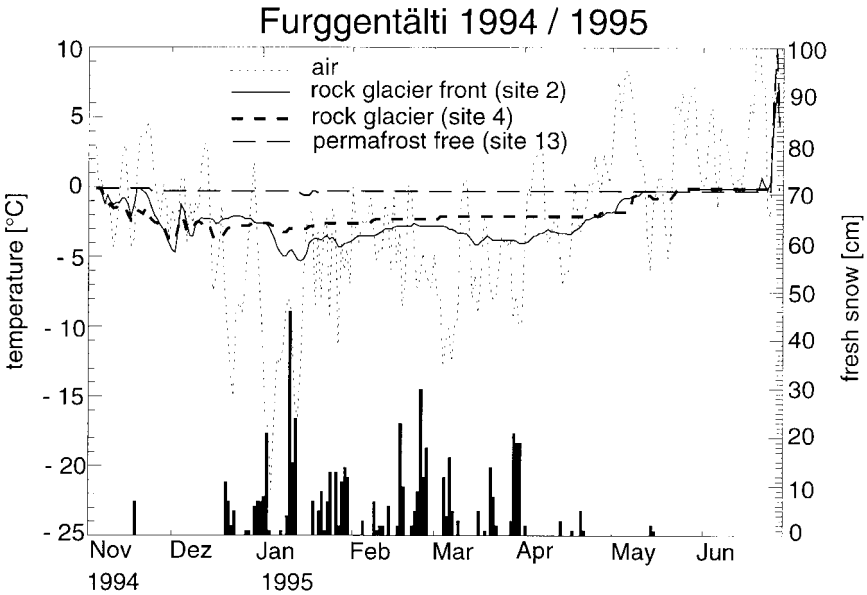

Figure 5. Bottom temperatures of the winter snow cover (BTS) in the Furggentälti area. The histogram shows the average fresh snow data for the two closest measuring sites Adelboden and Ried-Lötschental.

not exist, the loggers were installed beneath some larger boulders of the coarse surface material.

The two rock glacier sites (a) and (b) (Figure 4) at the Murtèl area and the rock glacier site (4) (Figure 5) in the Furggentälti area show similar general behaviour. In early winter (November to mid-January) the temperatures are decreasing. Thereafter, a small increase until mid-February is observed. During the following two months, before snowmelt starts, the BTS remains nearly constant.

The two sites on the rock glacier Murtèl cooled differently between November and January. In comparison with the sinusoidal decrease in the furrow (b), the temperatures on the ridge (a) decrease more or less continuously. The minimum in the furrow of −12 °C (10 January) is 3.5 °C cooler and one month earlier than the lowest temperature on the ridge. After reaching a minimum, both curves behave almost identically and reach a more or less constant temperature until the beginning of April for site (a) and the end of April for site (b). While the summer temperature rise in the furrow is very abrupt, the temperature on the ridge increases one month earlier in a slow, continuous way. On 16 May, the dataloggers in the Murtèl area were collected. Thermistor (a) on the ridge was covered by a 0.6 m thick snow cover, thermistor (b) in the furrow was buried by a 3 m thick snow cover. Several ice lenses up to 10 cm thick were detected at site (b) in the furrow.

The two permafrost-free sites at Murtèl and at Furggentälti (Figure 4, site c; Figure 5, site 13) show exactly the same behaviour. Their temperatures were close to 0 °C during the whole observation period.

In Figures 4 and 5, the temperatures under the prepared skin run (d) at Murtèl and at the front of the rock glacier Furggentälti (2) are shown. While the first cools down to −9.5 °C in early January, the latter reaches a minimum temperature of about −5 °C. The temperature decreases on the ski run (d) and at the rock glacier front (4) are similar to that on the furrow site (b) of the rock glacier Murtèl, with a sinusoidal shape. In contrast to the surface of the rock glaciers, the temperatures at the ski run and on the rock glacier were always fluctuating within a range of about −1.5 °C to −2 °C during the period of mid-February, March and April. On 16 May, thermistor (c) in front of the rock glacier Murtèl was buried by 1.8 m and thermistor (d) by 0.5 m of compressed snow. A massive ice layer of about 8 cm thickness has been detected at the base of the snow cover on the ski run.

In the Murtèl and Furggentälti area the atmospheric conditions, with respect to fresh snow and air temperature, had the following development. The air temperature was decreasing in a highly fluctuating manner from November, with highest temperatures at Murtèl of around +3.5 °C and at Furggentälti of around +5 °C to January and

Copyright © 1999 John Wiley & Sons, Ltd.

lowest temperatures at Murtèl and at Furggentälti of around −22 °C. The air temperature development through the whole winter is quite similar at both sites. The amount and date of fresh snowfalls are one of the most important points, especially in connection with the interpretation of the continuously measured BTS. There were two larger snowfalls in the Murtèl area, one in January and one in April. For the following interpretation, the snowfall of January is of fundamental importance.

INTERPRETATION

The temperature developments can be divided into three characteristic groups:

(1) The first group consists of all rock glacier sites; sites (a) and (b) in the Murtèl area (Figure 2) and site (4) in the Furggentälti area (Figure 3).
(2) The second group is composed of site (c) in the Murtèl area and site (13) in the Furggentälti area.
(3) In the last group are the remaining sites (d) at Murtèl and (2) at Furggentälti.

Comparisons are made first within each group, and then between the groups.

In group 1, a decrease of the temperatures during the months of November, December and early January can be observed. These decreasing temperatures can be explained by the lack of a sufficiently deep snow cover. On the rock glacier Murtèl (Figure 4) the cooling in the furrow (b) is much stronger than on the ridge (a). In the furrow, a clear correlation between the air temperature and the BTS exists. On the ridge (a), the temperature decrease is more uniform and continuous. Minimum temperatures in the furrow are some −2 to −3 °C colder than on the ridge. The active layer at both measurement sites consists of very coarse debris (mostly large boulders), which are, even with a thicker snow cover, still coupled with the atmosphere through funnels. The results of seismic refraction soundings (Vonder Mühll, 1993) show a thickness of the active layer of 0.5 to 1 m in the furrows and of 3 to 5 m on the ridges. Observations by Keller and Gubler (1993) and investigations by Sutter (1996) give hints towards an explanation of the processes, which lead to the different temperature behaviour in the furrow and on the ridge. The distribution of the funnels is very regular and they are most widespread at the margins of the furrows and very rare on the ridges. The assumption that cold air is flowing into the active layer in the middle of the furrows and warm air is leaving the active layer at the margins of the furrows could be verified by Sutter (1996), who measured temperatures in different funnels and found that the funnels at the margins of the furrows had warm temperatures and air flow direction was mainly upwards. In contrast to that, funnels in the centre of the furrows showed colder temperatures and the air flow direction was mainly downwards. The cold air travels on the permafrost table downwards and forces the warm air upwards, where it leaves the active layer through the funnels. The fast growth of large ice crystals by warm humid air at the funnel margins supports this assumption. In the upper parts of the ridges, the warm air remains conserved because there are no funnels on the upper parts of the ridges where air would be able to leave the active layer. In addition, the cold air flowing at the bottom of the active layer very close to the permafrost table is not influencing the warm air above. These results explain the different temperature evolution on the ridge and in the furrow. Furthermore, a thin snow cover exists in the furrows of the rock glacier at the beginning of the winter, while on the ridges the snow has drifted away. Calculations and measurements by Keller (1994) show that, especially in autumn and winter, the heat flow within the active layer above 1 m depth and with a snow cover of 5 cm thickness is higher by a factor of 2 than without snow.

At site (4) on the rock glacier Furggentälti (Figure 5), BTS evolution is somewhat between that at the two sites of the rock glacier Murtèl. The cooling at site (4) is not as strong as at rock glacier Murtèl. This can be explained by the deeper snow cover in early winter, which prevented stronger cooling. In the Murtèl area (Figure 4), the first large amount of snow fell on 11 January, while large amounts of snow fell at the end of October and also towards mid-January in the Furggentälti area. After these snowfalls, the temperatures at all three sites were slowly increasing to a more or less constant value. In March and April BTS values on the rock glacier Murtèl are about −6 °C, some −3.5 °C colder than those on the Furggentälti rock glacier. During that period, the BTS is free of atmospheric influences. It is only in this period that conventional BTS measurements and mapping could give useful hints on the permafrost distribution. After a period exceeding one month the temperature at site (a) on the rock glacier Murtèl increases slowly. This can be explained by the thinner snow cover on the ridge. At the two other sites (Figure 4, site b; Figure 5, site 4) the period of

Copyright © 1999 John Wiley & Sons, Ltd.

stable BTS is approximately one month longer than at site (a). The increase of the temperature is much faster than the cooling due to rapid meltwater percolation to the base of the snow cover. The measurements at Murtèl rock glacier ended before all snow had melted, but at the Furggentälti rock glacier a zero curtain can be observed from mid-May to the end of June.

In addition to the permafrost sites described above, the sites of group 2 show a completely different behaviour. Both sites lie outside the rock glaciers in permafrost-free terrain. The temperatures at these two locations were close to 0 °C throughout the whole winter period (Figure 4, site c; Figure 5, site 13). In early winter the temperature does not fall below the freezing point at these two sites because of the high amount of water content in the upper fine-grained soil layers. The latent heat stored in this wet surface layer is too high to let the soil freeze completely. In addition, the atmospheric cooling stopped in January at Murtèl and at the end of October at Furggentälti when a thick insulating snow cover had developed. This explanation is verified by similar measurements in the Murtèl area made in different years (1989–90 and 1990–91) by Keller (1994). In addition to this behaviour, the fine-grained surface receives much more shortwave radiation energy than the coarse surface of the rock glacier sites (Hoelzle, 1994). An interesting observation is that after the long cold period at the beginning of January (air temperatures around −22 °C) the BTS fell by some tenths of a degree below the freezing point. This decrease can be recognized at both sites in the Furggentälti as well as in the Murtèl area.

Group 3 consists of two quite different sites, which nevertheless show a remarkably similar temperature evolution. Thermistor (d) on the ski run in the Murtèl area is situated close to thermistor (c) in Figure 2. The ground surface beneath the ski run is artificially prepared and mainly consists of gravel. In the winter season, the snow on the ski run has been regularly compacted, enabling a higher heat flow through the snow cover (Figure 4, site d). At the beginning of winter, a direct correlation between air and surface temperatures can be recognized. After the snowfall of 11 January, the temperature rises (as in the first group) but never reaches an equilibrium temperature. This result can be explained by the different surface and snow cover characteristics. Heat flow through a compacted snow cover is increased and the surface energy exchange above the snow cover has an important influence on the ground temperature. The cold BTS on the ski run indicates that the compaction of the snow cover helps to cool the underlying ground during winter. Thermistor (2) at the front of the rock glacier Furggentälti also shows strong fluctuations during the whole winter. This site is strongly wind-exposed and it is situated (like group 1) on the coarse rock glacier surface. This thermistor probably measures, similar to thermistor (4), the air circulation in the active layer. At this site, the snow cover is very thin (wind erosion) through the whole winter and highly compacted by the wind. These two reasons could lead to the behaviour being similar to that on the ski run site in the Murtèl area. However, the temperature variations at thermistor (2) (Figure 5) are smoother than those on the ski run (d) (Figure 4). The reason for this is the strong artificial snow compaction on the ski run.

With respect to ground temperatures in Alpine periglacial regions, comparison between the three groups of temperature recordings clearly demonstrates the importance of:

(1) advective and convective heat fluxes in the active layer of the coarse rock glacier surface material
(2) the snow cover with its large temporal and spatial variations
(3) the characteristics of the ground surface (e.g. fine- or coarse-grained material)
(4) the availability of water stored in fine-grained soils (e.g. latent heat exchange)
(5) the influence of incoming as well as outgoing radiation.

For a better understanding of the processes which lead to these temperature conditions, energy balance measurements are now undertaken at Murtèl-Corvatsch. However, the newly developed MTDs open a wide field of interesting investigations in the field of permafrost research. The loggers are also suitable for sensors other than thermistors. Future long-term monitoring of changes in periglacial temperature regime (e.g. active layer) could give valuable information. In addition, it will be possible to better understand and interpret results from conventional BTS mapping.

CONCLUSIONS

(1) It is shown that the BTS method could be an easy method to safely indicate where permafrost is present or absent. The method can be recommended to monitor the long-term

Copyright © 1999 John Wiley & Sons, Ltd.

change of active layer development and the spatial distribution of discontinuous mountain permafrost.

(2) Newly constructed MTDs constitute an inexpensive method to continuously measure BTS and were found suitable for rough alpine environments.

(3) Continuous BTS measurements with MTDs over the winter season at different sites can help to better understand and interpret BTS mapping results. Combination of conventional BTS mapping with continuous BTS measurings is recommended.

(4) Together with energy balance measurements, the method can help to improve our understanding of the complex processes which act between atmosphere and permafrost in mid-latitude high-alpine environments.

(5) The MTDs are able to provide information on heat exchange processes at the surface, on relative differences in surface temperatures along flowlines on rock glaciers or in various catchments, on the special thermal conditions underneath and at the margins of perennial ice patches, on snow cover duration, on zero-curtain phenomena or on the role of meltwater and cold air drainage (vertical and lateral advection).

(6) The first available winter measurements provide interesting results, especially about the coupling of the atmosphere with the active layer through snow depending on microtopography (furrows and ridges).

(7) Artificially compacted snow cover and ground surfaces of ski runs strengthen ground cooling during winter time.

ACKNOWLEDGEMENTS

This research was supported by the Laboratory of Hydraulics, Hydrology and Glaciology at ETH-Zurich. Special thanks go to U. H. Fischer, W. Haeberli and two anonymous reviewers for carefully reading the manuscript.

REFERENCES

Bernhard, L., Sutter, F., Haeberli, W. and Keller, F. (1998). Processes of snow/permafrost-interactions at a high-mountain site, Murtèl-Corvatsch, Eastern Swiss Alps. In *Proceedings, Seventh International Conference on Permafrost*, Yellowknife. Canada. Collection Nordicana. pp. 35–41.

Blank, B. (1997). Prozessmonitoring. *Arbeitsheft der VAW/ETH Zürich*, **19**, 20–24.

Brown, R. J. E. (1965). Some observations on the influence of climatic and terrain features on permafrost at Norman Wells, N.W.T. *Canadian Journal of Earth Science*, **2**, 15–31.

Brown, R. J. E. (1973). Influence of climatic and terrain factors on ground temperatures at three locations in the permafrost region of Canada. In *Second International Conference on Permafrost*, Yakutsk. National Academy Press, Washington, pp. 27–34

Budmiger, K. (1997). Photogrammetrische Vermessung des Blockgletschers. *Arbeitsheft der VAW/ETH Zürich*, **19**, 14–16.

Cheng, G. and Dramis, F. (1992). Distribution of mountain permafrost and climate. *Permafrost and Periglacial Processes*, **3**(2), 83–91.

Funk, M. and Hoelzle, M. (1992). A model of potential direct solar radiation for investigating occurrences of mountain permafrost. *Permafrost and Periglacial Processes*, **3**(2), 139–142.

Gensler, G. A. (1978). *Das Klima von Graubünden. Habilitationsschrift an der Universität Zürich*, Schweizerische Meteorologische Anstalt Zürich (112 pp.).

Gold, L. W. (1958). Influence of snow cover on heat flow from the ground. *International Association of Science Hydrology*, **46**, 13–21.

Gold, L. W. (1963). Influence of the snow cover on the average annual ground temperature at Ottawa, Canada. *International Association of Science Hydrology*, **61**, 82–91.

Goodrich, L. E. (1982). The influence of snow cover on the ground thermal regime. *Canadian Geotechnical Journal*, **19**, 421–432.

Guoqing, Q. (1993). Development condition of alpine permafrost in the mountains of Tianshan, China. In *Sixth International Conference on Permafrost, Proceedings*, Vol. 1. pp. 533–538.

Haeberli, W. (1973). Die Basis Temperatur der winterlichen Schneedecke als möglicher Indikator für die Verbreitung von Permafrost. *Zeitschrift für Gletscherkunde und Glazialgeologie*, **9**(1–2), 221–227.

Haeberli, W. (1994). Research on permafrost and periglacial processes in mountain areas – status and perspectives. In *Sixth International Conference on Permafrost, Proceedings*, Vol. 2. pp. 1014–1018.

Haeberli, W., Cheng, G., Gorbunov, A. P. and Harris, S. A. (1993). Mountain permafrost and climatic change. *Permafrost and Periglacial Processes*, **4**(2), 165–174.

Haeberli, W., Huder, J., Keusen, H. R., Pika, J. and Röthlisberger, H. (1988). Core drilling through rock glacier permafrost. In *Sixth International Conference on Permafrost, Proceedings*, Vol. 2. pp. 937–942.

Harris, S. A. (1996). Lower mean annual ground temperatures beneath a block stream in the

Copyright © 1999 John Wiley & Sons, Ltd.

Kunlun Pass, Qinghai Province, China. In *Proceedings Fifth Chinese Permafrost Conference*, Lanzhou, pp. 227–237.

Harris, S. A. and Pedersen, D. E. (1998). Thermal regimes beneath coarse blocky materials. *Permafrost and Periglacial Processes*, **9**, 107–120.

Hinkel, K. M., Outcalt, S. I. and Nelson, F. E. (1993). Near-surface summer heat-transfer regimes at adjacent permafrost and non-permafrost sites in Central Alaska. In *Sixth International Conference on Permafrost, Proceedings*, Vol. 1. pp. 261–266.

Hinzman, L. D., Kane, D. L., Gieck, R. E. and Everett, K. R. (1991). Hydrologic and thermal properties of the active layer in the Alaskan Arctic. *Cold Regions Science and Technology*, **19**, 95–110.

Hoelzle, M. (1992). Permafrost occurrence from BTS measurements and climatic parameters in the Eastern Swiss Alps. *Permafrost and Periglacial Processes*, **3**(2), 143–147.

Hoelzle, M. (1994). *Permafrost und Gletscher im Oberengadin: Grundlagen und Anwendungsbeispiele für automatisierte Schätzverfahren*, Mitteilungen der Versuchsanstalt für Wasserbau, Hydrologie und Glaziologie ETH-Zurich 132 (121 pp.).

Hoelzle, M. (1996). Mapping and modelling of mountain permafrost distribution in the Alps. *Norsk Geografisk Tidskrift*, **50**(1), 11–15.

Hoelzle, M. and Haeberli, W. (1995). Simulating the effects of mean annual air-temperature changes on permafrost distribution and glacier size: an example from the Upper Engadin, Swiss Alps. *Annals of Glaciology*, **21**, 399–405.

Hoelzle, M., Haeberli, W. and Keller, F. (1993). Application of BTS measurements for modelling mountain permafrost distribution. In *Sixth International Conference on Permafrost, Proceedings*, Vol. 1., pp. 272–277.

Huijun, J., Guoqing, Q., Lin, Z., Shujuan, W. and Zhonggong, Z. (1993). Thermal regime of alpine permafrost in the upper reach of Urumqi river, Xinjiang, China. In *Sixth International Conference on Permafrost, Proceedings*, Vol. 1. pp. 307–311.

Humlum, O. (1998a). Active layer thermal regime at three rock glaciers in Greenland. *Permafrost and Periglacial Processes*, **8**, 383–408.

Humlum, O. (1998b). The climatic significance of rock glaciers. *Permafrost and Periglacial Processes*, **9**, 375–395.

Keller, F. (1994). *Interaktionen zwischen Schnee und Permafrost. Eine Grundlagenstudie im Oberengadin*, Mitteilungen der Versuchsanstalt für Wasserbau, Hydrologie und Glaziologie ETH-Zurich 127 (145 pp.).

Keller, F. and Gubler, H. (1993). Interaction between snow cover and high mountain permafrost, Murtèl-Corvatsch, Swiss Alps. In *Sixth International Conference on Permafrost, Proceedings*, Vol. 1., pp. 332–337.

King, L. (1984). *Permafrost in Skandinavien. Untersuchungsergebnisse aus Lappland, Jotunheimen und Dovre/Rondane*, Heidelberger Geographische Arbeiten 76 (174 pp.).

Krummenacher, B. (1997). Minitemperatur-Datenlogger UTL1. *Arbeitsheft der VAW/ETH Zürich*, **19**, 10–13.

Krummenacher, B. and Budmiger, K. (1992). Monitoring of periglacial phenomena in the Furggentälti Swiss Alps. *Permafrost and Periglacial Processes*, **3**(2), 149–156.

Krummenacher, B., Budmiger, K., Mihajlovic, D. and Blank, B. (1998). *Periglaziale Formen und Prozesse im Furggentälti, Gemmipass. Analysen zur räumlich-zeitlichen Entwicklung der Permafrostverbreitung und der Solifluktion, basierend auf der Entwicklung und Anwendung moderner*, Mitteilungen des Eidgenössischen Institutes für Schnee und Lawinenforschungsinstitutes 56 (245 pp.).

Le Drew, E. F. and Weller, G. (1978). A comparison of the radiation and energy balance during the growing season for Arctic and Alpine tundra. *Arctic and Alpine Research*, **10**(4), 665–678.

Matsuoka, N. (1998). Modelling frost creep rates in an Alpine environment. *Permafrost and Periglacial Processes*, **9**, 397–409.

Matsuoka, N., Hirakawa, K., Watanabe, T., Haeberli, W. and Keller, F. (1998). The role of diurnal, annual and millennial freeze–thaw cycles in controlling alpine slope instability. In *Proceedings, Seventh International Conference on Permafrost*, Yellowknife, Canada. pp. 711–717.

Mihajlovic, D. (1997). Einsatz der digitalen Bildverarbeitung bei der Beobachtung von periglazialen Phänomenon. *Arbeitsheft der VAW/ETH Zürich*, **10**, 17–19.

Nelson, F. E., Lachenbruch, A. H., Woo, M. K., Koster, E. A., Osterkamp, T. E., Gavrilova, M. K. and Guodong, C. (1993). Permafrost and changing climate. In *Sixth International Conference on Permafrost, Proceedings*, Vol. 2. pp. 987–1005.

Ødegård, R. S., Hoelzle, M., Johansen, K. V. and Sollid, J. L. (1996). Permafrost mapping and prospecting in southern Norway. *Norsk Geografisk Tidskrift*, **50**(1), 41–53.

Ødegard, R. S. and Sollid, J. L. (1993). Coastal cliff temperatures related to the potential for cryogenic weathering processes, western Spitsbergen, Svalbard. *Polar Research*, **12**(1), 95–106.

Outcalt, S. I. and Hinkel, K. M. (1996). The response of near-surface permafrost to seasonal regime transitions in tundra terrain. *Arctic and Alpine Research*, **28**(3), 274–283.

Smith, M. W. (1975). Microclimatic influences on ground temperatures and permafrost distribution, Mackenzie Delta, Northwest Territories. *Canadian Journal of Earth Sciences*, **12**, 1421–1438.

Smith, M. W. and Burn, C. R. (1987). Outward flux of vapour from frozen soils at Mayo, Yukon, Canada: results and interpretation. *Cold Regions Science and Technology*, **13**, 143–152.

Copyright © 1999 John Wiley & Sons, Ltd.

Smith, M. W. and Riseborough, D. W. (1996). Permafrost monitoring and detection of climate change. *Permafrost and Periglacial Processes*, **7**(4), 301–309.

Sutter, F. (1996). *Untersuchung von Schloten in der Schneedecke des Blockgletschers Murtèl-Corvatsch*, Master's thesis, Geographical Institute, University of Zurich (86 pp.).

Vonder Mühll, D. (1993). *Geophysikalische Untersuchungen im Permafrost des Oberengadins*, Mitteilungen der Versuchsanstalt für Wasserbau, Hydrologie und Glaziologie ETH-Zürich 122 (222 pp.).

Vonder Mühll, D. and Haeberli, W. (1990). Thermal characteristics of the permafrost within an active rock glacier. *Journal of Glaciology*, **31**(123), 151–158.

Vonder Mühll, D. and Holub, P. (1992). Borehole logging in alpine permafrost, Upper Engadin, Swiss Alps. *Permafrost and Periglacial Processes*, **3**(2), 125–132.

Vonder Mühll, D. and Huggenberger, P. (1997). Georadarmessungen auf dem kriechenden Permafrost des Blockgletschers Murtèl-Corvatsch. *Arbeitsheft der VAW/ETH Zürich*, **19**, 50–52.

Vonder Mühll, D. and Klingele, E. (1994). Gravimetrical investigation of ice-rich permafrost within the rock glacier Murtèl-Corvatsch (upper Engadin, Swiss Alps). *Permafrost and Periglacial Processes*, **5**(1), 13–24.

Vonder Mühll, D., Stucki, Th. and Haeberli, W. (1998). Borehole temperatures in Alpine permafrost: a ten years series. In *Proceedings, Seventh International Conference on Permafrost*, Yellowknife, Canada. Collection Nordicana, Vol. 54. pp. 1989–1095.

Wagner, S. (1992). Creep of Alpine permafrost, investigated on the Murtèl rock glacier. *Permafrost and Periglacial Processes*, **3**(2), 157–162.

Zhang, T. and Osterkamp, T. E. (1993). Changing climate and permafrost temperatures in the Alaskan Arctic. In *Sixth International Conference on Permafrost, Proceedings*, Vol. 1. pp. 783–788.

Copyright © 1999 John Wiley & Sons, Ltd.